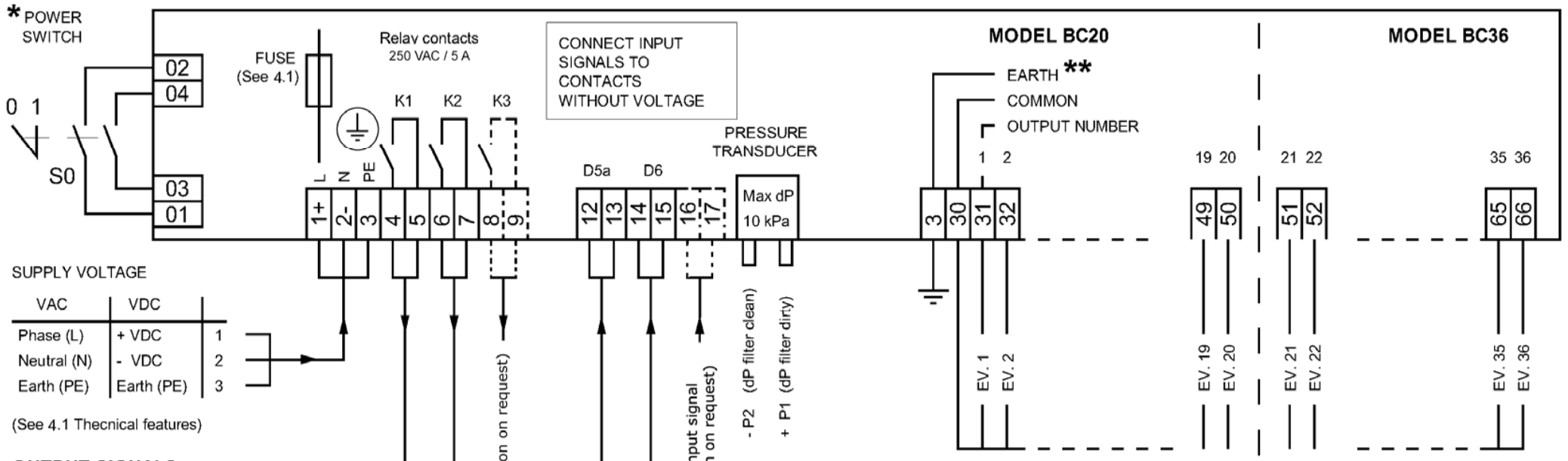

SUPPLY VOLTAGE

VAC	VDC	
Phase (L)	+ VDC	1
Neutral (N)	- VDC	2
Earth (PE)	Earth (PE)	3

(See 4.1 Thecnical features)

OUTPUT SIGNALS

RELAY SUPPLY VOLTAGE ON (K1)
Contact close with voltage On

CUMULATIVE ALARM RELAY (K2)
(See 7.1 Indications in alarms)

OUTPUT VOLTAGE FOR ELECTRO-VALVES
(For output voltages see 4.1 Technical features)

WITH OUTPUT VDC THE COMMON IS CONNECTED TO + VDC
WITH SUPPLY VOLTAGE VDC THE MINUS IS CONNECTED TO EARTH
**** DO NOT CONNECT TO EARTH (3) THE COMMON OF THE EV. (30)**

INPUT SIGNALS

CONSENT FROM EXTERNAL PRESSURE AIR
Contact close = Pressure air present
LINK CLAMPS IF NOT USED WITH INPUTS
FROM EXTERNAL CONTACT ENABLED
(See 2.2 Code D5a)

ON / OFF CLEANING FROM EXTERNAL CONTACT
Contact close = cycle enabled
LINK CLAMPS IF NOT USED WITH INPUTS
FROM EXTERNAL CONTACT ENABLED
(See 2.2 Code D6)

* ON REQUEST