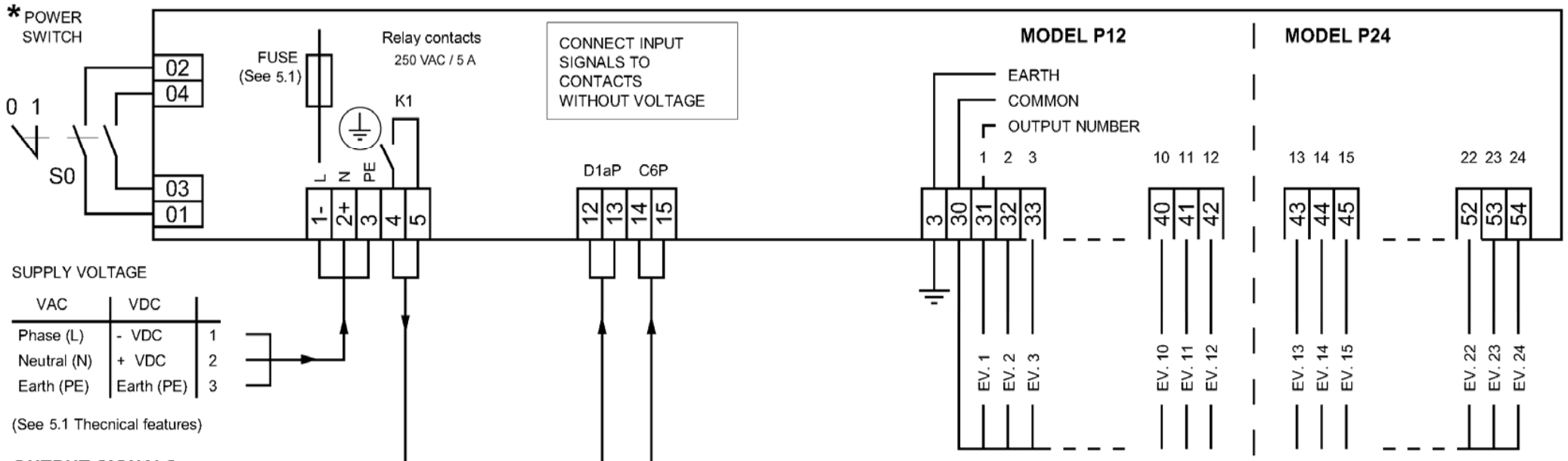

SUPPLY VOLTAGE

VAC	VDC	
Phase (L)	- VDC	1
Neutral (N)	+ VDC	2
Earth (PE)	Earth (PE)	3

(See 5.1 Thecnical features)

OUTPUT SIGNALS

RELAY SUPPLY VOLTAGE ON (K1)
Contact close with voltage On

OUTPUT VOLTAGE FOR ELECTRO-VALVES
(For output voltages see 5.1 Technical features)

WITH OUTPUT VDC THE COMMON IS CONNECTED TO + VDC

INPUT SIGNALS

ADDITIONAL CYCLES FROM FAN CONTACT
Contact close = FAN on
LINK CLAMPS IF NOT USED
(See 2.2 Code D1aP)

ON / OFF CLEANING FROM EXTERNAL CONTACT
Contact close = cycle enabled
LINK CLAMPS IF NOT USED
(See 2.2 Code C6P)

* ON REQUEST