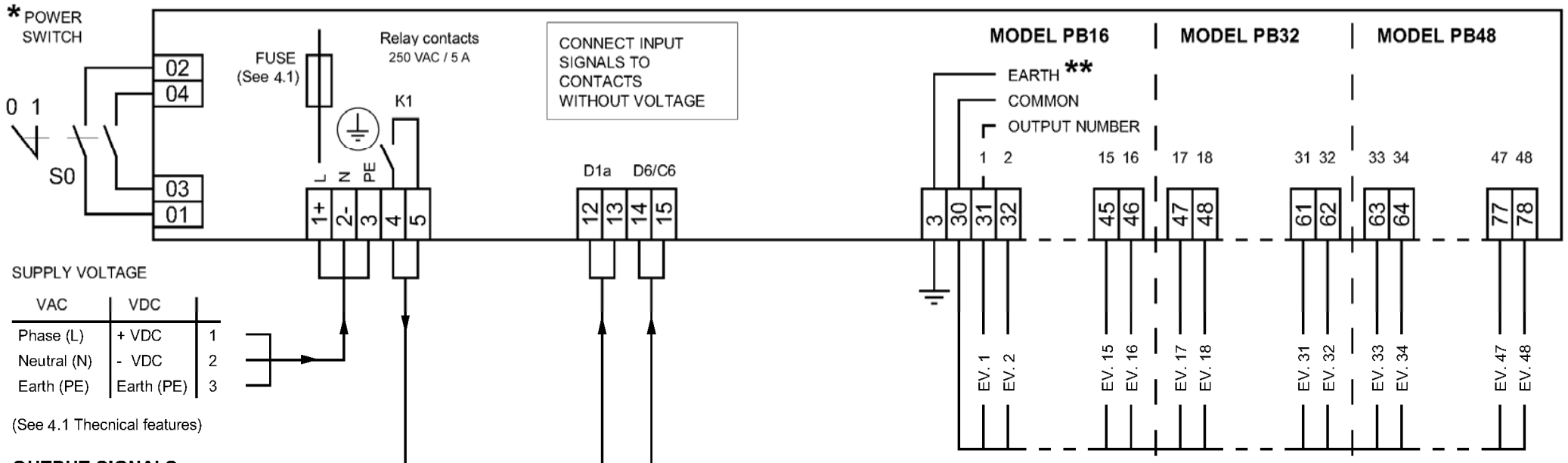

SUPPLY VOLTAGE

VAC	VDC	
Phase (L)	+ VDC	1
Neutral (N)	- VDC	2
Earth (PE)	Earth (PE)	3

(See 4.1 Thecnical features)

OUTPUT SIGNALS

CUMULATIVE ALARM RELAY (K1)

OUTPUT VOLTAGE FOR ELECTRO-VALVES

(For output voltages see 4.1 Technical features)

WITH OUTPUT VDC THE COMMON IS CONNECTED TO + VDC

WITH SUPPLY VOLTAGE VDC THE MINUS IS CONNECTED TO EARTH

**** DO NOT CONNECT TO EARTH (3) THE COMMON OF THE EV. (30)**

INPUT SIGNALS

ADDITIONAL CYCLES FROM FAN CONTACT
Contact close = FAN on
LINK CLAMPS IF NOT USED WITH INPUTS
FROM EXTERNAL CONTACT ENABLED
(See 2.2 Code D1a)

ON / OFF CLEANING FROM EXTERNAL CONTACT
Contact close = cycle enabled
LINK CLAMPS IF NOT USED WITH INPUTS
FROM EXTERNAL CONTACT ENABLED
(See 2.2 Code D6 / C6)

* ON REQUEST